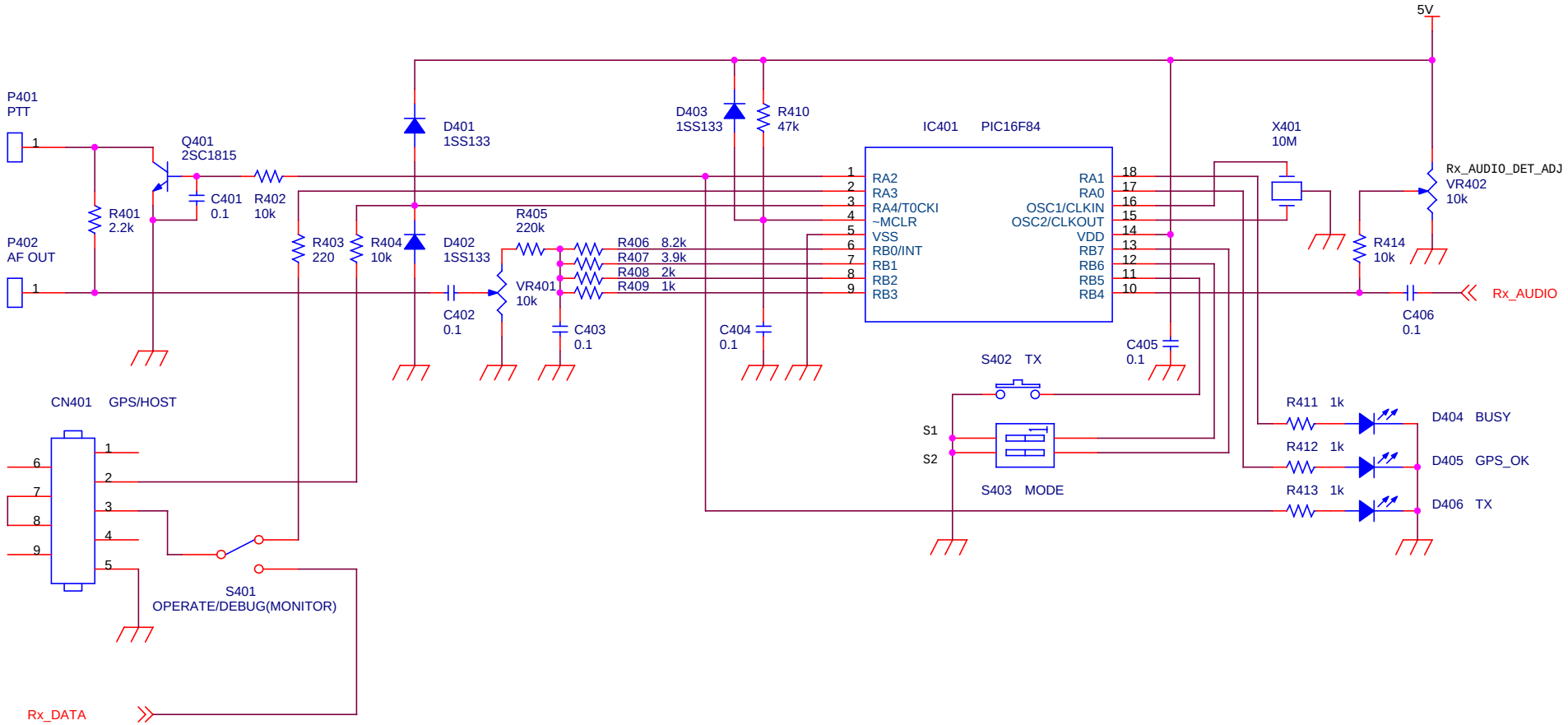

Title	BWTrack Page-2 (Tx section)	
Size A4	Document Number PROTOTYPE	Rev 0.1
Date: Sunday, September 10, 2006	Sheet 1 of 1	